Research Proposal(开题报告)

Project Topic Introduction：

This project addresses the typical industrial problem of operating condition monitoring for mechanical equipment. During long-term operation, equipment such as rotating machinery, machine tools, engines, and bearings will exhibit changes in vibration characteristics due to unbalance, looseness, wear, insufficient lubrication, or varying operating conditions. Failure to identify anomalies in a timely manner can easily lead to unplanned downtime, increased maintenance costs, production interruptions, and even safety accidents. Therefore, identifying equipment operating conditions based on vibration information is one of the core issues in predictive maintenance and intelligent operation and maintenance [1][2].

In current engineering practice, equipment condition monitoring mainly relies on contact vibration sensors, such as accelerometers and velocity sensors. While these methods are mature and reliable, they also have practical constraints:

1. High costs for sensor installation and wiring;
2. Limited number of measurement points and insufficient spatial coverage;
3. Restricted deployment in high-temperature, narrow, hazardous, or inaccessible scenarios;
4. Models often require re-collection and retraining when new operating conditions or equipment are added [1][3].

Therefore, exploring a dual-point monitoring scheme that balances reliability, flexibility, and scalability has clear engineering value.

Based on this, this project proposes a dual-point scheme using a triaxial vibration sensor + global camera. The basic idea is to:

1. Use the triaxial vibration sensor to obtain stable and mature contact vibration signals;
2. Simultaneously use the global camera to perform non-contact visual vibration measurement on local areas of the equipment, extracting features such as displacement time series, main spectral peaks, and frequency band energy;
3. Further realize equipment operating condition recognition through feature fusion, and explore incremental update capabilities with a small number of new operating condition samples.

This scheme does not attempt to replace traditional vibration monitoring, but rather introduces visual vibration measurement to improve measurement point flexibility, interpretability, and deployment adaptability, while retaining the reliability of the contact-based scheme.

Research Status at China and Abroad

Overseas research on mechanical condition monitoring and predictive maintenance started early, forming a relatively mature research framework of "vibration sensors + signal processing + intelligent diagnosis". Relevant reviews point out that vibration analysis remains one of the most effective and commonly used methods for condition monitoring, but industrial applications still face challenges such as measurement point arrangement, cost, data quality, and model generalization [1][2][3]. In the field of visual vibration measurement, international research has evolved from early video motion magnification to methods based on phase-based motion processing, visual vibrometry, and non-contact vibration measurement, enabling the recovery of micro-vibrations from videos and the estimation of characteristic frequencies [4][5][6][7]. Recent studies have begun to further apply visual methods directly to non-contact condition monitoring of rotating machinery, indicating that the application of visual methods in mechanical scenarios is moving from "algorithm verification" to "monitoring applications" [8].

Domestic research has also advanced rapidly in recent years, but overall it focuses on two main directions:

1. Traditional and intelligent fault diagnosis based on vibration signals, with extensive accumulation in objects such as bearings, rotors, and electromechanical systems;
2. Non-contact vibration/displacement measurement based on computer vision, mainly applied to civil structures, shaking table tests, railway systems, and large-scale structure monitoring scenarios [9][10].

This shows that China has established a solid technical foundation in "visual non-contact vibration measurement", but research combining it with mechanical equipment condition monitoring, bimodal fusion, and incremental learning remains relatively insufficient. On the other hand, research on incremental learning for fault diagnosis is increasing both domestically and internationally, especially addressing issues such as changing operating conditions, few-shot new faults, and continuous category expansion, with a number of incremental learning methods proposed for bearing fault diagnosis [11][12][13]. However, most of these works still focus on single vibration signals, and research on incremental updates under the "vision + sensor" bimodal condition is still inadequate.

Overall, existing studies have separately proven three key points:

1. Contact vibration monitoring is effective for mechanical fault identification;
2. Visual vibration measurement can extract micro-vibration information as a non-contact method;
3. Incremental learning is expected to alleviate the problem of insufficient samples for new operating conditions and new faults in industrial fields.

Nevertheless, combining triaxial vibration sensors with global cameras to construct a dual-point fusion scheme for mechanical equipment operating condition monitoring, and further considering few-shot incremental updates, still presents significant research space and application significance.

Research Entry Point and Practicality

The practicality of this project is mainly reflected in three aspects:

1. **Engineering Deployment**: The dual-point scheme balances the stability of contact vibration monitoring with the non-contact advantages of visual vibration measurement, making it suitable for complex, constrained, or rapidly deployable mechanical scenarios.
2. **Recognition Performance**: Multimodal feature fusion is expected to improve robustness to different operating conditions and anomaly types, mitigating the impact of single measurement point failures.
3. **Operation and Maintenance**: Incremental learning can better meet on-site needs, enabling rapid updates with a small number of new samples instead of full retraining each time.

Therefore, this project not only has algorithmic research value but also a clear engineering application background, making it a suitable thesis proposal topic in the field of intelligent monitoring for mechanical equipment.

Research Content and Schedule：

The project period is from April to June 2026, following a rhythm of "early-stage research and scheme convergence, mid-stage implementation and verification, and late-stage integration and reporting". Key milestones are as follows:

- April 6: Finalize the research direction and start literature review;
- April 14: Complete the thesis proposal;

- May 12: Conduct mid-term discussion;
- May 26: Present mid-term demonstration;
- June 16: Participate in the project closing seminar;
- June 17: Complete the final project report.

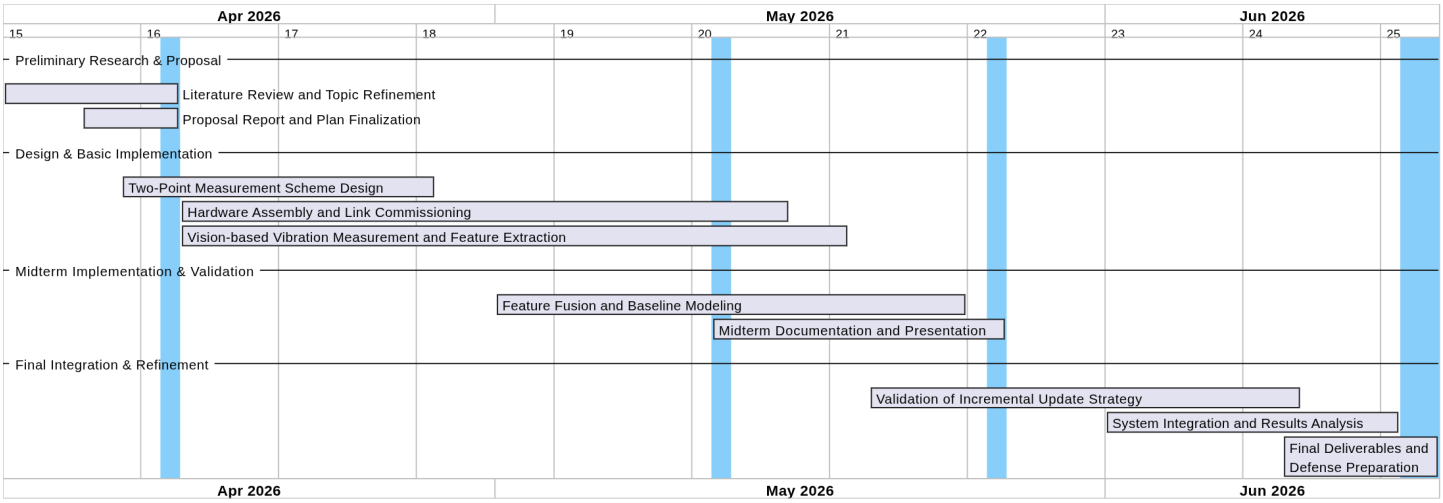

Stage	Time	Main Tasks	Stage Outputs
Preliminary research and project initiation	4.06 - 4.14	Clarify the research direction, complete the literature review, and converge the technical route	Opening report, preliminary system plan
Scheme design and basic implementation	4.15 - 5.12	Complete the design of the dual-measurement point link, hardware selection, visual algorithm prototype and data acquisition plan	Prototype code, collection plan, stage data
Mid-term implementation and verification	5.01 - 5.26	Establish a baseline model, complete phased experiments, and organize mid-term materials	Mid-term presentation and experimental results
Later integration and improvement	5.20 - 6.17	Incremental update verification, system integration testing, result analysis, and project conclusion material organization	Final report, defense PPT, demonstration system

Research Objectives and expected outcomes

Research object

Focusing on the scenario of mechanical equipment condition monitoring, this project aims to address the following three core issues:

1. In scenarios where access is restricted or inconvenient, how to utilize a global camera to stably extract the local vibration features of the equipment and complement the vibration information measured by the sensor.

2. Under the conditions of limited sample size and existing changes in working conditions, how to construct a dual-modal feature fusion state recognition method applicable to the scope of course projects.

3.When a small number of new working condition samples are added to the system later, how can lightweight incremental updates be achieved without complete retraining.

Anticipated results

Objective	Corresponding achievements
Build a dual-measurement point monitoring link	Complete the prototype of "three-axis sensor + global camera" acquisition and synchronous analysis
Establish the main link for visual vibration measurement	Output the ROI corner point trajectory, median displacement timing, and visual features such as the sliding window main frequency, power, spectral centroid, and spectral entropy
Implement the state recognition model	Complete the single-modal baseline and dual-modal fusion classification experiments
Verify the incremental update capability	Complete prototype updates or lightweight online update demonstrations based on a small number of new samples
Complete the course delivery	Form the materials for the proposal, mid-term and conclusion, as well as a demonstrable system

Differences and Research Value

Compared with the single sensor fault diagnosis scheme, the difference of this project does not lie in simply replacing the measurement methods, but in taking engineering application as the orientation and incorporating non-contact visual vibration measurement into the traditional vibration monitoring system to form a dual-point collaborative perception. At the same time, the model update issue under the condition of small sample additions is considered to make the scheme closer to the real equipment operation and maintenance scenarios. The research value is reflected in three dimensions: "deployability, scalability, and interpretability".

Research Ideas：

The algorithm route of machine learning and incremental learning

This section focuses on how to derive model representations applicable to classification and incremental updating from multi-source vibration data. The overall approach is to first construct a stable, interpretable feature engineering pipeline and baseline classification workflow, and then integrate a lightweight incremental update mechanism on this foundation, rather than directly adopting complex deep learning models. At present, the core algorithm for the vision module has been finalized as **ROI corner tracking + displacement time series reconstruction + sliding-window Welch spectral feature extraction**. This technical route complies with the schedule constraints of the curriculum project and facilitates the explanation of the logical correspondence among inputs, intermediate processing variables and final features during the defense presentation.

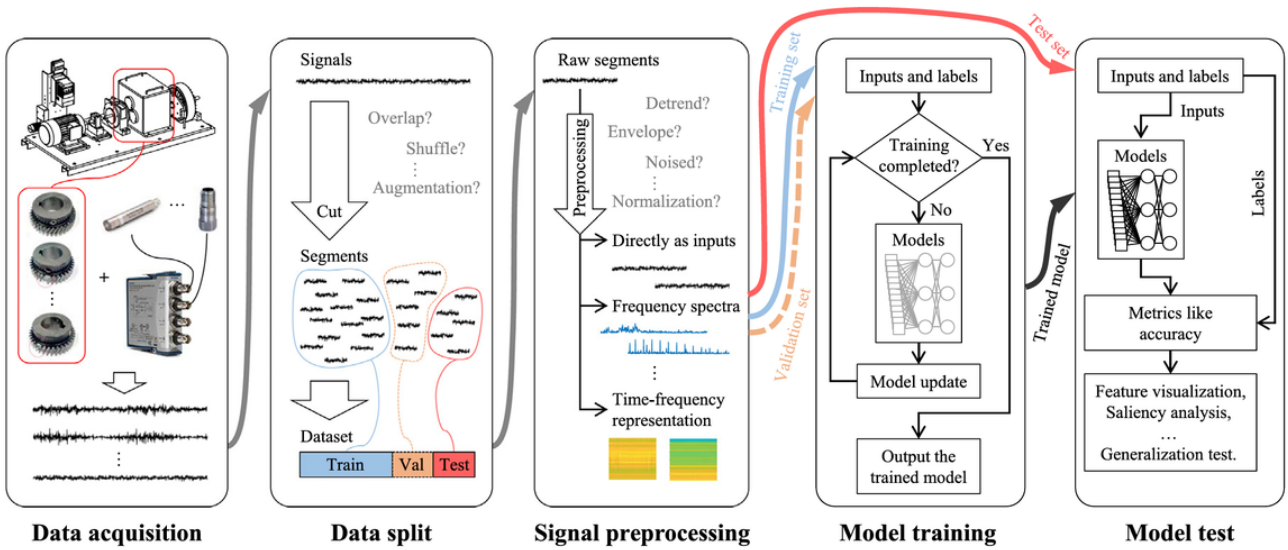

Fig. 2. A common workflow of fault diagnosis tasks through DL models, i.e., IFD.

Core steps of the algorithm layer

1. Perform DC removal, filtering, spectral estimation and statistical feature extraction on the sensor-side signals.
2. Select a stable ROI for the visual side video and extract Shi-Tomasi corner points within the ROI.
3. Track corner displacements using Lucas-Kanade optical flow to obtain multi-point displacement trajectories, and form a robust displacement time series through median aggregation.
4. Perform Welch spectral analysis on the displacement time series within a unified time window, and extract window-level features such as dominant frequency, peak power, spectral centroid, and spectral entropy.

5. Visual and sensor features are organized into structured samples according to a unified time window, and a single-modal baseline model and a dual-modal fusion classifier are established.
6. Design an incremental update mechanism to update the model or class prototypes when a small number of new samples are added.

Software + hardware + data roadmap in systems engineering

This section focuses on implementing algorithmic strategies within a functional, real-world course project system. The systems engineering approach follows a main workflow of hardware acquisition, data synchronization, software processing, model training, and result visualization. It emphasizes a complete closed-loop system ranging from physical devices—such as sensors, cameras, and embedded control boards—to host computer algorithms.

1. Set up the mechanical experimental object and the data acquisition environment for sensors and cameras.
2. Utilize the STM32 for low-level data acquisition, control, and interface management.
3. Perform video analysis, signal processing, model training, and result storage on the Orange Pi or host computer.
4. Establish a sample management mechanism with time windows and labels to support subsequent fusion training.
5. Display status recognition results and the experimental process via the front-end/back-end interface or a demonstration page.

Proposed scheme, key technologies:

module	Key technologies
Visual vibration measurement	ROI selection, Shi-Tomasi corner detection, Lucas-Kanade optical flow tracking, median shift reconstruction, sliding window Welch spectral analysis
Vibration measurement by sensors	Three-axis sampling, filtering, time-domain statistics, frequency-domain feature extraction

Fusion recognition	Unified window alignment, structured feature table construction, feature concatenation, traditional machine learning classification
Incremental update	Class center update, few-shot supplementation, lightweight online update

Hardware：

The overall hardware block diagram is shown in the figure：

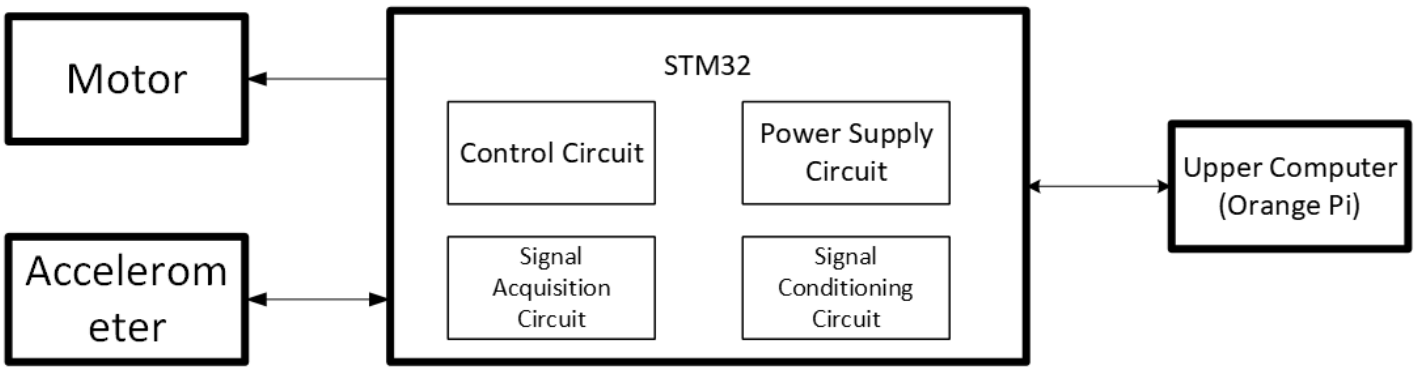

The gearbox model is driven by a motor to rotate the gears. An accelerometer is mounted on the surface of the gearbox to collect vibration signals, which are then converted into processable voltage signals. The STM32 performs data acquisition and signal conditioning on the electrical signals generated by the sensor, and then transmits the data to the Orange Pi for further processing. In addition, the STM32 is responsible for controlling and powering both the motor and the accelerometer. The output signals from the STM32 are sent to the Orange Pi for advanced processing, such as calculating the frequency and amplitude of the vibration signals.

Taking the ADXL345 triaxial accelerometer as an example, its measurement principle is based on Newton's Second Law. When attached to the gearbox surface, the sensor's casing moves synchronously with the gearbox, converting the vibration signals into processable voltage signals. This voltage signal is typically an analog signal, which is acquired and quantized by an Analog-to-Digital Converter (ADC) to produce a digital output for further processing by the STM32.

Feasibility Analysis:

Technical feasibility

dimension	Feasibility Statement	Current Risks	Countermeasures

Visual vibration measurement	A main chain of "corner tracking - displacement reconstruction - sliding window Welch features" has been formed, with a clear algorithm structure and convenient output of structured features.	It is greatly affected by illumination, texture, frame rate and optical flow drift.	Select a stable ROI to ensure sufficient texture and lighting, record the actual sampling frame rate, and mitigate the impact of abnormal trajectories through multi-point statistics and window analysis.
Vibration measurement using sensors	The solution for the three-axis accelerometer is mature, and the acquisition link is easy to build.	Insufficient signal-to-noise ratio at small amplitudes, and platform tilt introduces gravitational component interference	Select sensors with appropriate measuring range and resolution, and strengthen structural fixation and filtering processing.
Fusion recognition	Feature engineering combined with traditional machine learning is suitable for small-sample course projects.	Dual-modal synchronization and label management are complex	Adopt unified time window and sample number management
Incremental updating	The implementation threshold for prototype updates and lightweight online learning is relatively low	When there are too few samples in the new working condition, the results tend to be unstable.	First, conduct demonstration-level verification, and then control the range of working conditions.

Resource feasibility

The resources required for this project mainly include a mechanical experimental object, a triaxial accelerometer, a global camera, an STM32 microcontroller, an Orange Pi (or host computer), and standard software development environments.

The current proposal utilizes mature hardware and open-source algorithm libraries. Given the low barrier to acquiring these resources, the project is well-suited for prototype verification within the course timeline. On the software side, building upon the existing visual vibration measurement prototype, the subsequent focus will be on integrating the sensor branch, conducting fusion training, and performing system joint debugging.

Time Feasibility

In terms of scheduling, the project adopts a phased approach . The early stage focuses on research and solution convergence. The mid-term is dedicated to prototype implementation

and validation, and the final stage concentrates on joint debugging , incremental updates, and documentation.

Technically, priority is given to interpretable and cost-effective traditional machine learning and lightweight incremental learning schemes. By avoiding complex deep learning models that pose high implementation risks within the course timeline, the overall schedule remains controllable .

Key innovation points：

1. Propose a "Dual-Measurement-Point Fusion" scheme for mechanical equipment condition monitoring , which integrates contact sensors with non-contact visual vibration measurement.

2. On the visual side, the focus is not on motion magnification. Instead, we adopt a quantifiable main pipeline consisting of "corner cluster tracking + median displacement reconstruction + sliding-window Welch features" .

3. Align the visual window feature table with the sensor window feature table to generate structured samples that facilitate fusion classification and subsequent expansion.

4. Introduce a few-shot incremental update mechanism within the scope of the course project, enabling the system to rapidly adapt to new working conditions.

5. Construct a complete system spanning from acquisition, synchronization, and modeling to visualization , rather than stopping at the level of offline algorithm verification.

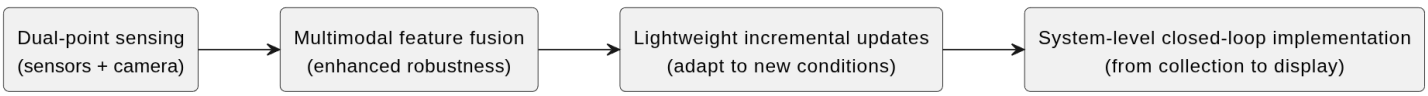

Personnel Division：

Name	Task Assignment
YANG Xuanzhi	Model training
GAN Yunxuan	Hardware
YE Bingli	Connecting with teachers, back-end driver, camera data collection
HE Xinhao	Web frontend and backend
YANG Zhe	Hardware
ZHANG Zhanshuo	Visual data processing
ZHANG Jiaxin	Document writing and testing

Budget：

Group No.	Project	Purchased List	Pruchased link	Price/Per iteam/RMB	Total Cost/ RMB	Amount over budget
Group8	Mechanical equipment operation status monitoring based on dual measurement points of three-axis vibration sensors and global vision cameras	1.ZD Atomic Elite STM32 Development Board STM32F103ZET 6 Learning Kit ARM Embedded Microcontroller	https://e.tb.cn/h.iMgy0MTo02ms3hX?tk=kx1u55pDm4S	242RMB	810.95RMB	0RMB
		2.Servo SG90-BEE BLOCK Accessories	https://e.tb.cn/h.iMTk7ZToejtfGLd?tk=59os55KQYEv	9.8RMB		
		3.Six-axis gyroscope module MB018	https://e.tb.cn/h.iMTk7ZToejtfGLd?tk=59os55KQYEv	9.8RMB		
		4.5V Relay Module MB010	https://e.tb.cn/h.iMTk7ZToejtfGLd?tk=59os55KQYEv	9.8RMB		
		5.The attitude calculation module of the Zongdian Atom MS6DSV uses the gyroscope angle and acceleration sensor instead of the MPU6050.	https://e.tb.cn/h.iLrir9oeCJNjkXS?tk=Mi0455KoUZC	26.2RMB		
		6.BEE BLOCK Development Board - STM32F103C8 Basic Kit	https://e.tb.cn/h.iLrmEsPvPFDxkNg?tk=i1aE55KswL6	68.6RMB		
		7.Luxury Edition 112 Motor Gear Combination Package	https://e.tb.cn/h.iMTEOdeH1CasCJX?tk=v37z55KFrqg	27.35RMB		

		8.N20 DC speed reducer motor - low-speed small motor - robot - metal gear 6V50r	https://e.tb.cn/h.ionlgepo0BR2cJa?tk=mfUT55Kx2Fm	19.5RMB		
		9.Free shipping belt wheel combined generator - Electric generator model assembly for children's science experiments and physics toys	https://e.tb.cn/h.ionmrxvmgim7ha9?tk=Xd5I55KCtSD	9.9RMB		
		10.USB3.0 industrial camera with 1.3 million pixels, 200 frames per second, 400 frames per second, global shutter, high-speed motion capture camera, no driver required	https://e.tb.cn/h.ionmrxvmgim7ha9?tk=Xd5I55KCtSD	388RMB		

References

[1] Ietezaz Ul Hassan, Krishna Panduru, Joseph Walsh. An In-Depth Study of Vibration Sensors for Condition Monitoring. Sensors, 2024. DOI: 10.3390/s24030740 (https://doi.org/10.3390/s24030740)

[2] D. Goyal, B. S. Pabla. Condition based maintenance of machine tools—A review. CIRP Journal of Manufacturing Science and Technology, 2015. DOI:10.1016/j.cirpj.2015.05.004 (https://doi.org/10.1016/j.cirpj.2015.05.004)

[3] N. Ismail, K. Chatterton, A. Pennacchi, et al. Non-contact sensor placement strategy for condition monitoring of rotating machine-elements. Engineering Science and Technology, an

International Journal, 2019. DOI: 10.1016/j.jestch.2018.12.006 (https://doi.org/10.1016/j.jestch.2018.12.006)

[4] Neal Wadhwa, Michael Rubinstein, Frédo Durand, William T. Freeman. Phase-Based Video Motion Processing. ACM Transactions on Graphics, 2013. DOI: 10.1145/2461912.2461966 (https://doi.org/10.1145/2461912.2461966)

[5] Abe Davis, Michael Rubinstein, Neal Wadhwa, et al. Visual Vibrometry: Estimating Material Properties from Small Motions in Video. IEEE Transactions on Pattern Analysis and Machine Intelligence, 2017. DOI: 10.1109/TPAMI.2016.2622271 (https://doi.org/10.1109/TPAMI.2016.2622271)

[6] Modal analysis of machine tools using visual vibrometry and output-only methods. CIRP Annals, 2020. DOI: 10.1016/j.cirp.2020.04.043 (https://doi.org/10.1016/j.cirp.2020.04.043)

[7] A novel phase-based video motion magnification method for non-contact measurement of micro-amplitude vibration. Mechanical Systems and Signal Processing, 2024. DOI: 10.1016/j.ymssp.2024.111429 (https://doi.org/10.1016/j.ymssp.2024.111429)

[8] Seo Hyeon Jeong, Yeseul Kong, Seunghwan Lee, Gyuhae Park. Non-contact condition monitoring of rotating machinery via phase-synchronized stroboscopic imaging. Structural Health Monitoring, 2026. DOI: 10.1177/14759217251410493 (https://doi.org/10.1177/14759217251410493)

[9] 冯海龙, 刘伯奇, 胡海天, 等. 基于视觉测振技术的高铁无站台柱雨棚振动测量方法. 地震工程与工程动力学, 2022. DOI: 10.13197/j.eeed.2022.0322 (https://doi.org/10.13197/j.eeed.2022.0322)

[10] 韩建平, 张一恒, 张宏宇. 基于计算机视觉的振动台试验结构模型位移测量. 地震工程与工程振动, 2019. DOI: 10.13197/j.eeev.2019.04.22.hanjp.003 (https://doi.org/10.13197/j.eeev.2019.04.22.hanjp.003)

[11] Junhui Zheng, Hui Xiong, Yuchang Zhang, et al. Bearing Fault Diagnosis via Incremental Learning Based on the Repeated Replay Using Memory Indexing (R-REMIND) Method. Machines, 2022. DOI: 10.3390/machines10050338 (https://doi.org/10.3390/machines10050338)

[12] Bearing fault diagnosis under various conditions using an incremental learning-based multi-task shared classifier. Knowledge-Based Systems, 2023. DOI: 10.1016/j.knosys.2023.110395 (https://doi.org/10.1016/j.knosys.2023.110395)

[13] Rui Yang, Pengfei Zhang, Zhirui Kai, et al. Few-shot class-incremental fault diagnosis of bearings via pseudo-incremental learning and dual-model complementarity. Proceedings of the IMechE, Part C, 2026. DOI: 10.1177/09544062251413635 (https://doi.org/10.1177/09544062251413635)